RBI: Risk-Based Inspection Reassessment

by Lynne Kaley, P.E. & Greg Alvarado

Greg Alvarado

- Inspection NDE Specialist and Risk Management Specialist
- 30+ Years Refining, Petrochemical and Midstream Gas Processing Experience
- Leader in Risk-Based technology development for plant applications
- Chief Editor of Inspectioneering Journal
- Member of API committees for development of Inspection Subcomittee, API 510, 570 task groups, API 580 and API 581 recommended practices
- Developer and Official Trainer for API 580/581 Public Training course
- Vice President with Equity Engineering

The Equity Engineering Group, Inc.

Lynne Kaley

- Materials/Corrosion and Risk Management Engineer
- 30 Years Refining, Petrochemical and Midstream Gas Processing Experience
- Leader in Risk-Based technology development for plant applications
- Project Manager of API RBI Joint Industry Project since 1996
- Member of API committees for development of API 580 and API 581 recommended practices
- Developer and Official Trainer for API 580/581 Public Training course
- Vice President and Principal Engineer with Equity Engineering

The Equity Engineering Group, Inc.

Purpose

- Purpose of Presentation
  - Highlight key parts of API 581 and 581
  - API 510, 570 and 653 allowance for RBI
  - Overview RBI implementation steps
  - RBI Reassessment and & Updating
  - Discuss the role of the inspector in RBI
- Sources
  - API RBI User Group Joint Industry Project
  - API 580
  - API 581
  - API 510, 570, 653
  - API 571
  - API RBI Software

Presentation Overview

- Introduction
- API RBI Document Status
- API 580 Overview
- API 581 Overview
- Risk Analysis
- Probability of Failure
- Consequence of Failure
- Inspection Planning
- Reassessment and Updating
- Summary

Introduction

- The API Risk-Based Inspection (API RBI) methodology may be used to manage the overall risk of a plant by focusing inspection efforts on the equipment with the highest risk
- API RBI provides the basis for making informed decisions on inspection frequency, the extent of inspection, and the most suitable type of Non-Destructive Examination (NDE)
- In most processing plants, a large percent of the total unit risk will be concentrated in a relatively small percent of the equipment items
- These potential high-risk components may require greater attention, perhaps through a revised inspection plan
- The cost of increased inspection effort may sometimes be offset by reducing excessive inspection efforts in the areas identified as having lower risk

Introduction

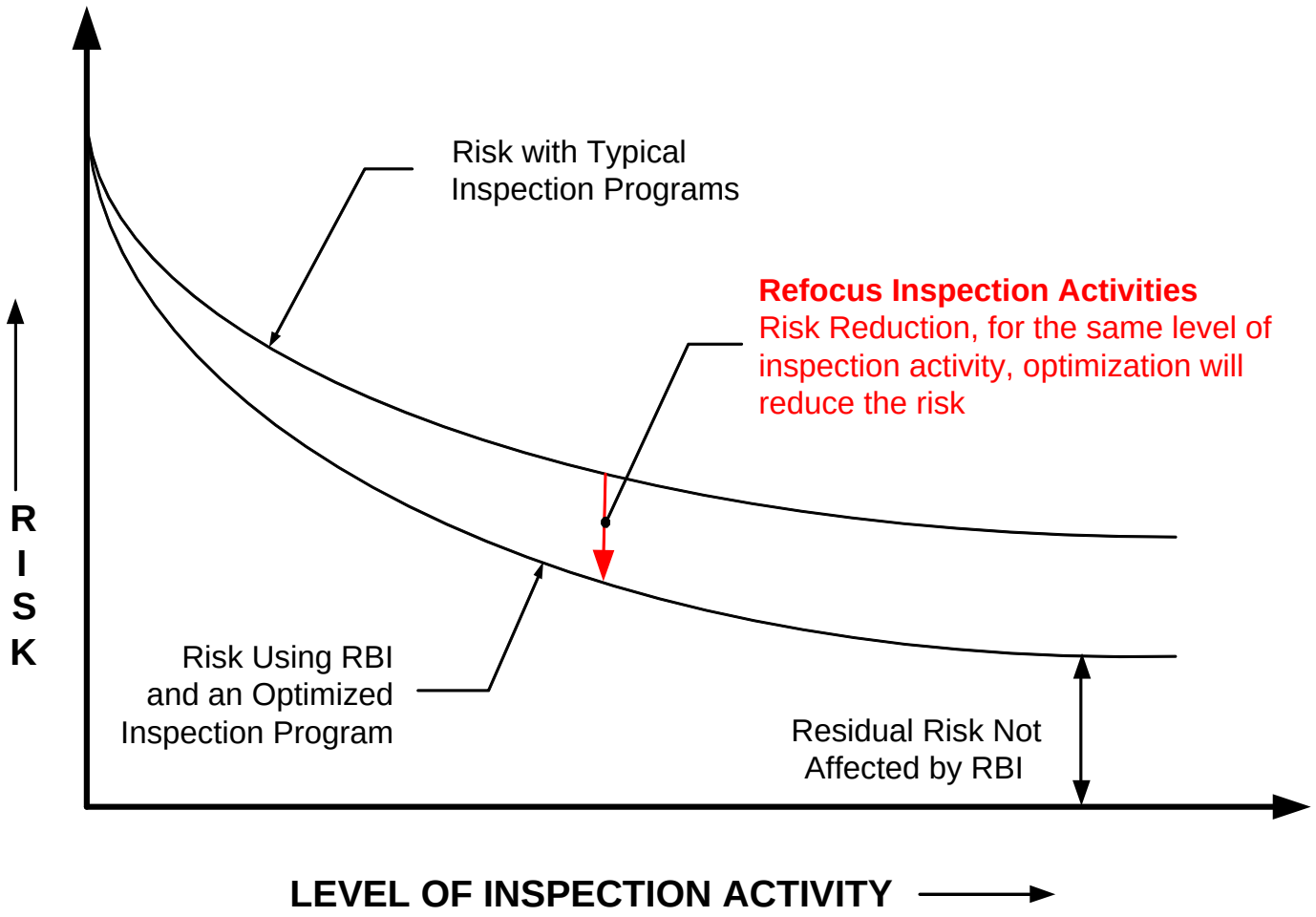

Introduction

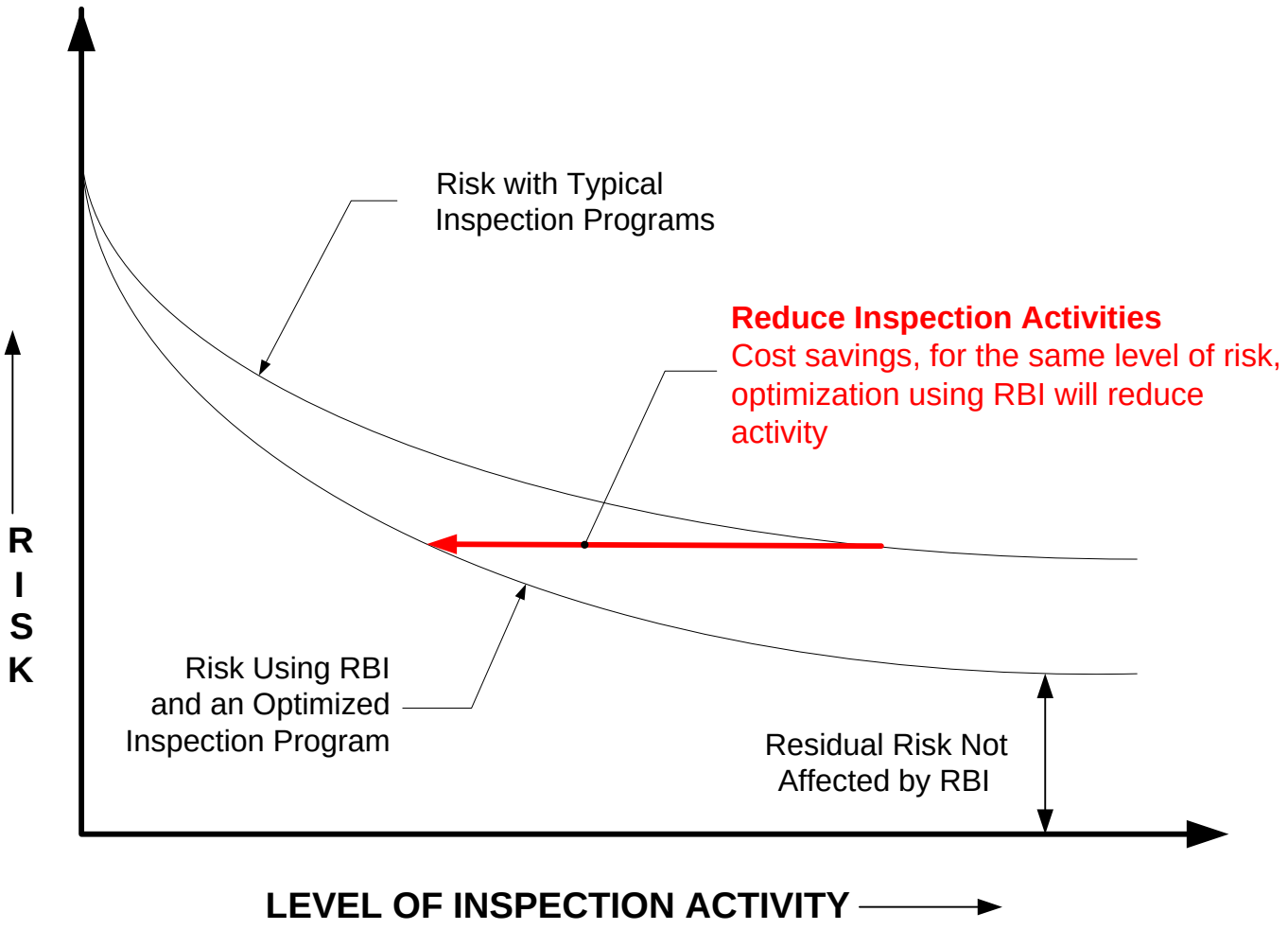

Introduction

- Calculation of Risk in API RBI
  - Involves determination of Probability Of Failure (POF) and consequence of failure for pressurized equipment
  - Failure in API RBI is defined as loss of containment resulting in leakage to atmosphere or rupture of vessel
  - Accumulation of damage over time results in increased risk
  - At some point in time, the calculated risk exceeds a user specified risk target and an inspection is required
- Role of Inspection in API RBI
  - Inspection is used to better quantify damage
  - Reduces uncertainty, reducing probability of unexpected failures

API RBI Document Status

- API RBI was initiated as a Joint Industry Project in 1992, two publications produced
  - API 580 Risk-Based Inspection (1st Edition May, 2002)
    - Introduces the principles and presents minimum general guidelines for RBI
    - 2nd Edition targeted for 2009
  - API 581 Base Resource Document – Risk-Based Inspection (1st Edition May, 2000)
    - Provides quantitative RBI methods for inspection planning
- API 581 API RBI Technology (2nd Edition published September, 2008) significantly revised to a new three part document
  - Part 1: Inspection Planning Using API RBI Technology
  - Part 2: Determination of Probability of Failure in an API RBI Assessment
  - Part 3: Consequence Analysis in an API RBI Assessment

Overview of API 580 Contents

- Foreword
- Section 1 – Purpose
- Section 2 – Scope
- Section 3 – Normative References
- Section 4 – Definitions and Acronyms
- Section 5 – Basic Risk Assessment Concepts
- Section 6 – Introduction to Risk Based Inspection
- Section 7 – Planning the RBI Assessment
- Section 8 – Data and Information Collection for RBI Assessment
- Section 9 – Damage Mechanisms and Failure Modes
- Section 10 – Assessing Probability of Failure
- Section 11 - Assessing Consequence of Failure
- Section 12 – Risk Determination, Assessment and Management

Overview of API 580 Contents

- Section 13 – Risk Management with Inspection Activities
- Section 14 – Other Risk Mitigation Activities
- **Section 15 – Reassessment and Updating RBI Assessments**
- Section 16 – Roles, Responsibilities, Training and Qualifications
- Section 17 – RBI Documentation and Record Keeping
- **Section 18 – Summary of Pit RBI Pitfalls**

- Appendix A – Damage Mechanisms Descriptions
- Appendix B – Screening Table for Damage Mechanisms
- Appendix C – Screening Table of Examination Methods
- Bibliography

Section 1 – Purpose

- Using RBI as a Continuous Improvement Tool
  - Vehicle for continuously improving the inspection of facilities and systematically reducing the risk associated with pressure boundary failures
  - Reassessment tool that provides refreshed view of risks as new data becomes available or when changes occur
  - Adjustment to risk management plans, as appropriate, when changes occur
  - Identify gaps or shortcomings of commercially available inspection technologies and applications
  - Identify opportunities for other risk mitigation approaches to implemented.
  - Serve to guide the direction of inspection technology development and promote faster and broader deployment of emerging inspection technologies as well as proven inspection technologies that are underutilized

Section 2 – Scope

- Target Audience
  - Primarily inspection and engineering personnel, responsible for mechanical integrity and operability of equipment
  - Not exclusively an inspection activity; requiring involvement from engineering, maintenance and operations
  - Requires commitment and cooperation of an entire operating organization
  - Necessary for other stakeholders to be familiar with RBI concepts and principles to the extent necessary in order to understand the risk assessment process and accept results

Section 15 – Reassessment and Updating RBI Assessments

- RBI is a dynamic tool that can provide current and projected future risk based on data and knowledge at the time of the assessment
- With time, changes occur that require updating and an RBI assessment
- It is important to maintain and update a RBI program to assure the most recent inspection, process, and maintenance information is included
- The results of inspections, changes in process conditions and implementation of maintenance practices can all have significant effects on risk and can trigger the need for a reassessment

Section 15 – Reassessment and Updating RBI Assessments

- Reasons to Conduct an RBI Reassessment:
  - Deterioration Mechanisms and Inspection Activities
  - Process & Hardware changes
  - RBI Assessment Premise Change
  - Effect of Mitigation Strategies
- When to Conduct an RBI Reassessment
  - After significant changes
  - After a set Time Period
  - After Implementation of Risk Mitigation Strategies
  - Before and After Maintenance Turnarounds

Section 18 – Summary of RBI Pitfalls

- Pitfalls that can lead to less than adequate results (examples):
  - Poor planning – unclear objectives, undefined operating boundaries, inadequate management support or RBI resources, unrealistic expectations
  - Poor Quality Data & Information Collection – poor quality data, failing to collect data needed
  - Damage Mechanisms and Failure Modes – not properly identifying and analyzing appropriate damage mechanisms
  - Assessing Probability of Failure – incorrect assignment of damage mechanisms or damage rates, poor assessment of past inspection
  - Assessing Consequence of Failure – incorrect assessment of potential hazards or outcomes
  - Determination, Assessment and Management – using "black box" technology, inadequate use or documentation of assumptions

Section 18 – Summary of RBI Pitfalls

- Pitfalls that can lead to less than adequate results (examples):
  - Risk Management with Inspection Activities – inadequate inspection planning basis, inadequate planning for inspection resources
  - Other Risk Management Activities – not considering risk management activities other than inspection
  - Reassessment and Updating RBI Assessment – not understanding the dynamic nature of risk over time, not having a good link between RBI and MOC
  - Roles, Responsibilities, Training and Qualifications for RBI Team Members – inadequate skills, training, or experience, or knowledge
  - RBI Documentation and Record-Keeping – Not understanding the need for proper documentation and assumptions

API 510, Ninth Edition

- RBI used to establish appropriate inspection intervals for internal, on-stream and external inspection
  - Allow intervals other than 10 year inspection and ½-life limits for internal and on-stream inspections
  - Allow intervals other than 5 year inspection limits for the external inspections.
- When using an RBI interval for the internal or on-stream, the RBI assessment shall be reviewed and approved by the engineer and inspector at least every 10 years

API 510, Ninth Edition

- RBI assessment review should include review of inspection history and potential for pressure-relieving device(s) fouling
- An RBI assessment can be done to exceed the following inspection intervals for pressure-relieving devices:
  a. Five years for typical process services
  b. Ten years for clean (non-fouling) and noncorrosive services

API 570, Second Edition

- RBI assessment used to develop appropriate inspection intervals for thickness and external inspections (Table 6-1)
- RBI assessment used to develop appropriate inspection intervals for CUI inspection after external visual (Table 6-2)
- When using an RBI interval and inspection coverage, RBI assessments shall reviewed at least at the interval recommended in Table 6.1
- The RBI assessments shall be reviewed and approved by a piping engineer and authorized piping inspector

API 653, Third Edition

- RBI assessment used to establish appropriate tank bottom inspection interval (Table 6.1)
- When using an RBI interval for the internal or on-stream, the RBI assessment shall be reviewed and approved by the engineer and inspector at least every 10 years
- Approval by an authorized inspector and an engineer(s), knowledgeable and experienced in tank design (including tank foundations) and corrosion

API 580 Summary

- Selection process for RBI approach
- Type of process and technology (qualitative vs. quantitative)
- Documented and structured implementations work process
- Documented methodology and risk calculation procedure
- Consistent approach
  - Procedure
  - Facilitator training Consequence analysis
- Probability analysis
- Corrosion/Materials review
- Documented technical basis
- Inspection Planning approach
  - Is there a risk mitigation plan
  - Follow through mechanism
- Re-evaluation process and trigger
- Link to MOC process
- RBI Team Training

API 581 Document

- Part 1 - Inspection Planning Using API RBI Technology
  - Calculation of Risk as a combination of POF and COF
  - Inspection Planning using time stamping
  - Presentation of results, Risk Matrix (area and financial) – introduce user specified POF and COF category ranges
  - Risk Calculations for Vessels, Piping, Tanks, Bundles and PRDs
- Part 2 - Determination of Probability of Failure in an API RBI Assessment
  - POF calculation
  - Part 2, Annex A - Management Score Audit Tool
  - Part 2, Annex B - Corrosion Rate Determination
- Part 3 - Consequence Modeling in API RBI
  - COF calculation
    - Level 1 modeler with step-by-step procedure
    - Level 2 modeler providing rigorous procedure
    - Tank model consequence calculation
  - Part 3, Annex A - Detailed background of Level 1 and Level 2 consequence modeler
  - Part 3, Annex B – SI and US Unit Conversion Factors

Risk Analysis

- In general, risk is calculated as a function of time as follows

$$R(t) = POF(t) \cdot C(t)$$

- The probability of failure is a function of time, since damage due to cracking, thinning or other damage mechanisms increases with time
- In API RBI, the consequence of failure is assumed to be independent of time, therefore

$$R(t) = POF(t) \cdot CA \qquad for\ \ Area - Based\ \ Risk$$

$$R(t) = POF(t) \cdot FC \qquad for\ \ Financial - Based\ \ Risk$$

Risk Analysis

- Risk ranking of equipment at a defined point in time may be shown using a Risk Matrix
- Priority for inspection efforts is often given to components in the HIGH or MEDIUM-HIGH risk category

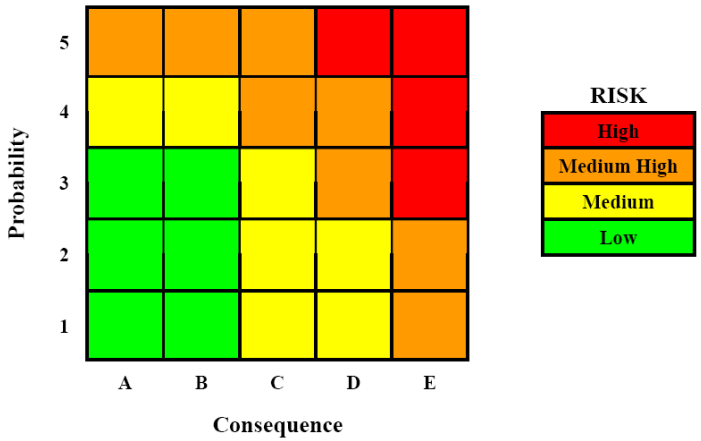

Numerical Values Associated with Consequence and Probability Categories in API RBI

Probability Category (1)		Consequence Category (2)	
Category	Range	Category	Range
1	$D_{f-total} \le 2$	A	$CA \le 100$
2	$2 < D_{f-total} \le 20$	B	$100 < CA \le 1000$
3	$20 < D_{f-total} \le 100$	C	$1000 < CA \le 3000$
4	$100 < D_{f-total} \le 1000$	D	$3000 < CA \le 10000$
5	$D_{f-total} > 1000$	E	$CA > 10000$

Notes:
1. In terms of the total damage factor.
2. In terms of maximum component consequence area.

$$CA = \max\left[CA_{cmd},\ CA_{inj}\right]$$

Probability Of Failure

- The Probability Of Failure used in API RBI is:

$$POF(t) = gff \cdot D_f(t) \cdot F_{MS}$$

$where:$

$POF(t)$	–	$the\ probability\ of\ failure\ as\ a\ function\ of\ time$
gff	–	$generic\ failure\ frequency$
$D_f(t)$	–	$damage\ factor\ as\ a\ function\ of\ time$
F_{MS}	–	$management\ systems\ factor$

- The time dependency of probability of failure is the basis of using RBI for inspection planning

Probability Of Failure

- Generic Failure Frequencies, *gffs*, are provided in API RBI for distribution of hole sizes (small, medium, large and the rupture case) for various types of pressurized equipment (vessels, piping, tanks, etc.)
- The *gffs* are based on industry data of vessel failures and are intended to represent failure frequencies due to fabrication flaws (and other non-service related damage) prior to any exposure to the operating environment
- The probability of failure for a component is determined by making adjustments to the *gffs* to account for departures from industry data
  - Management Systems Factor, F_{MS}
  - Damage Factor, D_f

Probability Of Failure

- Management Systems Factor, F_{MS}
  - Accounts for the influence of the facility's management systems in place (PSM, MOC, Mechanical Integrity, etc.)
  - Assumes that the probability that accumulating damage will be discovered through inspection is directly proportional to the quality of the facility's PSM program
- Damage Factor, D_f
  - The damage factor quantifies the degradation expected from the operating environment and includes degradation due to corrosion/erosion, environmental cracking, hydrogen attack, embrittlement and fatigue
  - The total damage from multiple mechanisms is based on the principal of superposition
  - **Identification of active damage mechanisms is a critical component of an API RBI analysis**

Probability Of Failure

- Methods for determining damage factors are provided in API 581 covering the following damage mechanisms

$$D_{f-total} = \min\left[D_f^{thin},\ D_f^{elin}\right] + D_f^{extd} + D_f^{scc} + D_f^{htha} + D_f^{brit} + D_f^{mfat}$$

$$where:$$

$$D_f^{thin} - damage\ \ factor\ \ for\ thining\ (corrosion/erosion)$$

$$D_f^{elin} - damage\ \ factor\ \ for\ equipment\ lining$$

$$D_f^{extd} - damage\ \ factor\ \ for\ external\ damage$$

$$D_f^{scc} - damage\ \ factor\ \ for\ stress\ corrison\ cracking$$

$$D_f^{htha} - damage\ \ factor\ \ for\ high\ temperature\ hydrogen\ attack$$

$$D_f^{brit} - damage\ \ factor\ \ for\ brittle\ \ fracture$$

$$D_f^{mfat} - damage\ \ factor\ \ for\ mechanical\ \ fatigue$$

Consequence of Failure

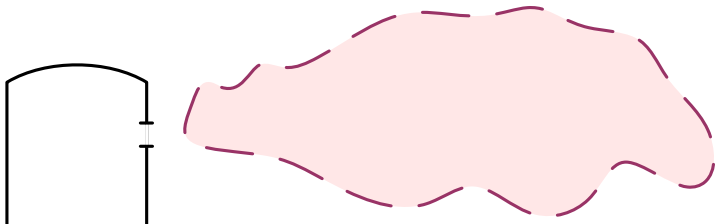

VCE, Flash Fire, Fireball,
Toxic Exposure,
Safe Dispersions

Instantaneous Gas

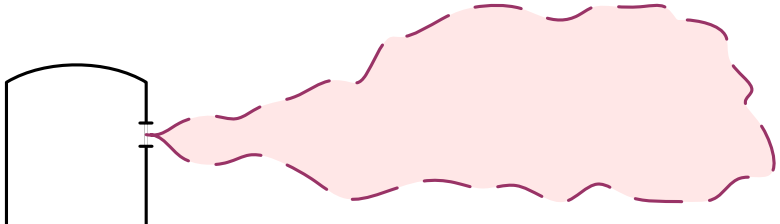

VCE, Flash Fire
Jet Fire, Toxic Exposure
Safe Dispersions

Continuous Gas

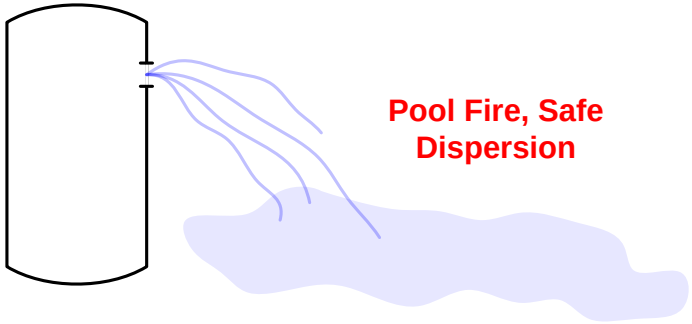

Pool Fire, Safe
Dispersion

Instantaneous Liquid

Jet Fire, Pool Fire,
Safe Dispersion

Continuous Liquid

Consequence of Failure

- Methodology
  - Determine Fluid Properties
  - Select Hole Sizes
  - Calculate Release Rate
  - Establish inventory groups and available mass
  - Determine Release Type (Continuous or Instantaneous)
  - Assess Detection and Isolation Systems
  - Determine consequence areas and associated costs

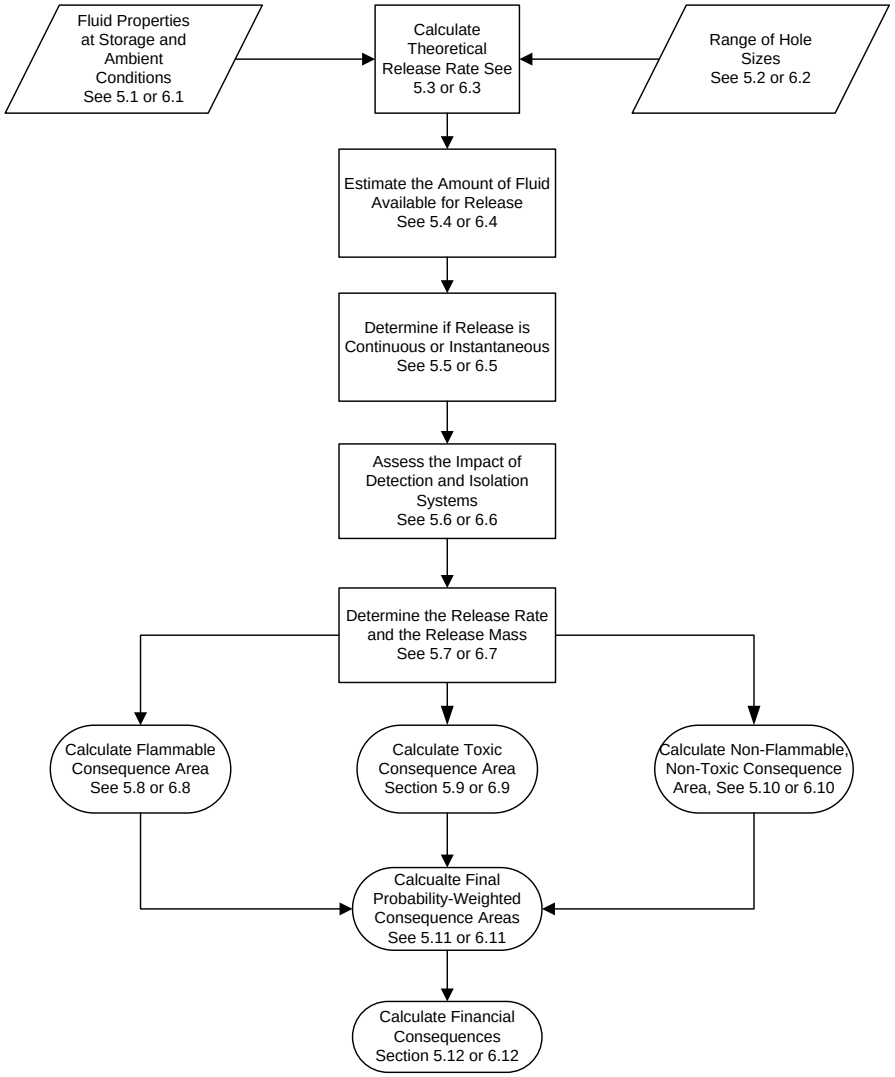

Consequence of Failure

- Final consequence areas are determined as a probability-weighted area of each of the individual event outcome areas

$$CA_{flam} = \left(p \cdot CA\right)_{pool} + \left(p \cdot CA\right)_{jet} + \left(p \cdot CA\right)_{VCE} + \ldots\ldots\ldots\ldots$$

$$CA_{flam} = \sum_{i=1}^{n} \left(p \cdot CA\right)_{i}$$

- Financial consequences are calculated including the costs associated with:
  - Equipment repair
  - Downtime and associated production losses
  - Serious injury to personnel
  - Environmental impact
- API RBI provides two levels of consequence modeling

Inspection Planning

- Risk increases with time as component damage increases
- If multiple damage mechanisms occur at the same time, then the principal of superposition is used to derive total risk
- At some point in time, risk reaches the user's specified risk target

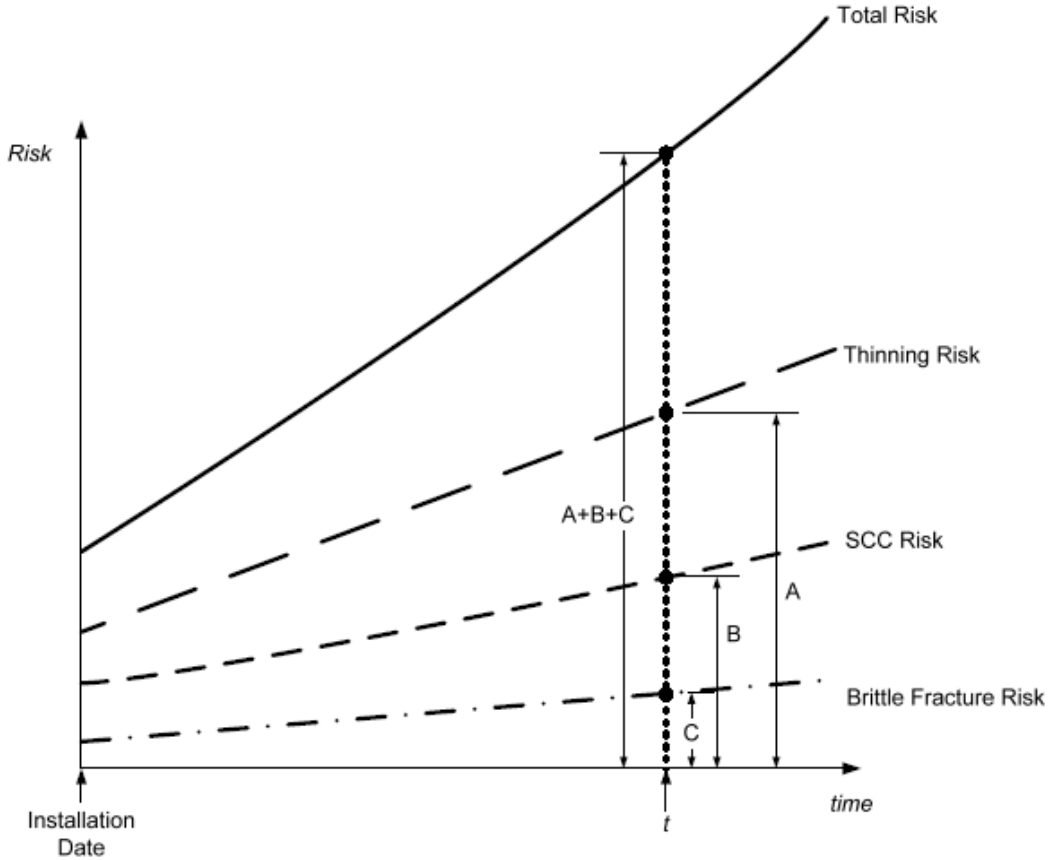

Figure 5 – Superposition Principle for the Calculation of Risk in API RBI

Inspection Planning

- Inspection planning involves recommending the number and level of inspections required to reduce risk to acceptable value at the plan date
- Inspection effectiveness is graded A through E, with A providing the greatest certainty of finding damage mechanisms that are active and E representing no inspection
- Consider the following three cases…..

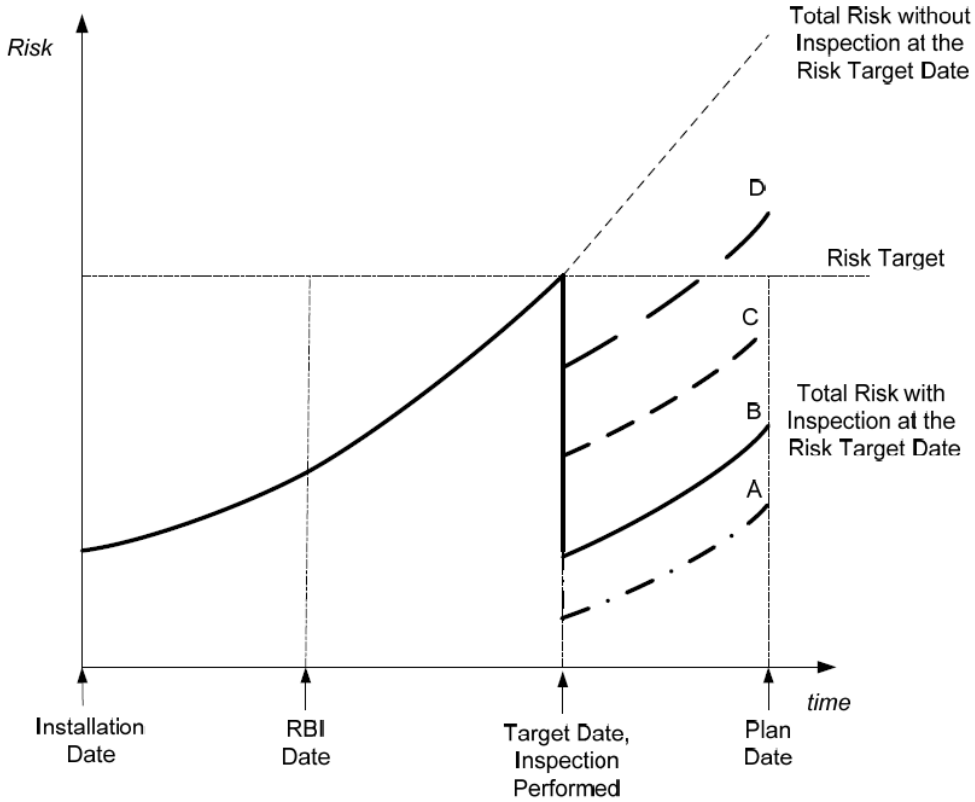

Figure 7 – Case 1: Inspection Planning When the Risk Target is Exceeded Between the RBI Date and the Plan Date

Inspection Planning

- For many applications, the user's risk target has already been exceeded at the time the RBI analysis is performed
- Inspection is recommended immediately

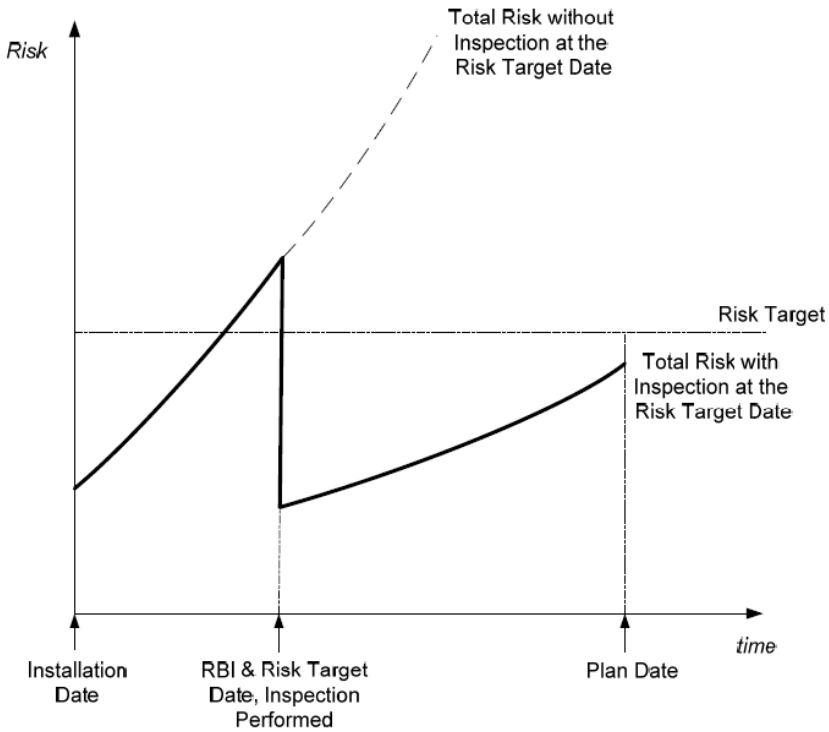

Figure 8 – Case 2: Inspection Planning When the Risk Target has been Exceeded Prior to the RBI Date

Inspection Planning

- When the risk is determined to be acceptable at the plan date, inspection is not required

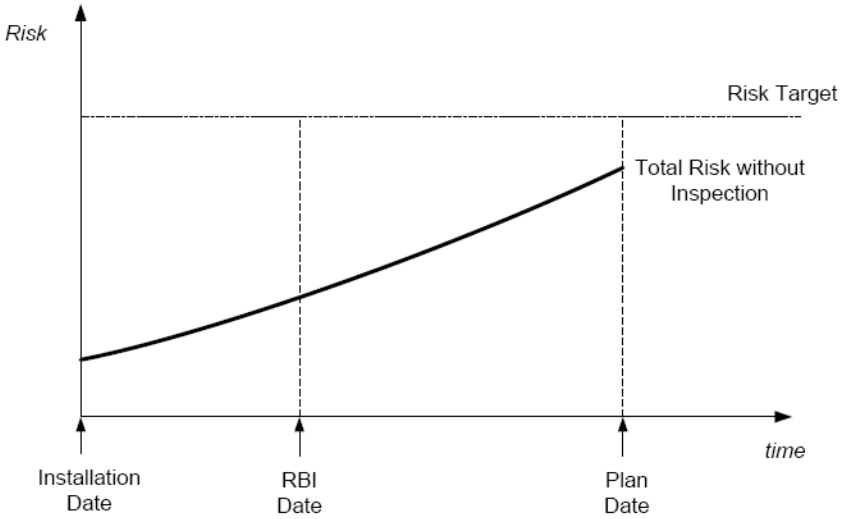

Figure 9 – Case 3: Inspection Planning When Risk Target is Not Exceeded Prior to the Plan Date

Inspection Planning

- Based on the previous three cases, an inspection plan is developed on a component basis
- Equipment is modeled as a group of individual components in API RBI
- The final inspection plan for the equipment is based on the results derived for the components
- The inspection plan includes:
  - The date and timing of the required inspection,
  - The type of NDE (e.g., visual, UT, Radiography, WFMT) based on the active damage mechanisms
  - The extent of the inspection (e.g., percent of total area examined or specific locations)
  - Location of inspection (external or internal)

API RBI Document Overview

- Part 1 - Inspection Planning Using API RBI Technology
  - Calculation of Risk as a combination of POF and COF
  - Inspection Planning using time stamping
  - Presentation of results, Risk Matrix (area and financial) – introduce user specified POF and COF category ranges
  - Risk Calculations for Vessels, Piping, Tanks, Bundles and PRDs
- Part 2 - Determination of Probability of Failure in an API RBI Assessment
  - POF calculation
  - Part 2, Annex A - Management Score Audit Tool
  - Part 2, Annex B - Corrosion Rate Determination
- Part 3 - Consequence Modeling in API RBI
  - COF calculation
    - Level 1 modeler with step-by-step "canned" procedure
    - Level 2 modeler providing rigorous procedure
    - Tank model consequence calculation
  - Part 3, Annex A - Detailed background of Level 1 and Level 2 consequence modeler
  - Part 3, Annex B – SI and US Unit Conversion Factors

RBI Implementation Process

RBI Work Process Steps

1. Define the Scope
2. Establish the Team
3. Create an Equipment List
4. Collect General Equipment Data
5. Collect Consequence Data
6. Collect Probability/Inspection Data
7. Develop an Inspection Plan and Risk Benefit

Step 1 - Define Scope

- Define the physical and operational/process breaks within the defined scope
  - Areas, Systems, Circuits defined for each unit studied
  - Smallest unit breakdown is Area
- Do not break the Unit or Area in the middle of an isolatable group.
  - Isolatable group is a group of equipment where inventory can be isolated by remotely operated valves
  - Manual adjustment/estimate to inventory is required for individual equipment items for study

Equipment Covered in RBI Study

- Reactor
- Column
- Drum
- KO Drum
- Piping (NS/Tube, Snd.)
- Filter
- PRD
- Heat Exchanger (SS/TS)
- Finfan/Header
- Storage Tank
- Furnace
- Pump
- Compressor

Defining the Equipment Included in the RBI Study

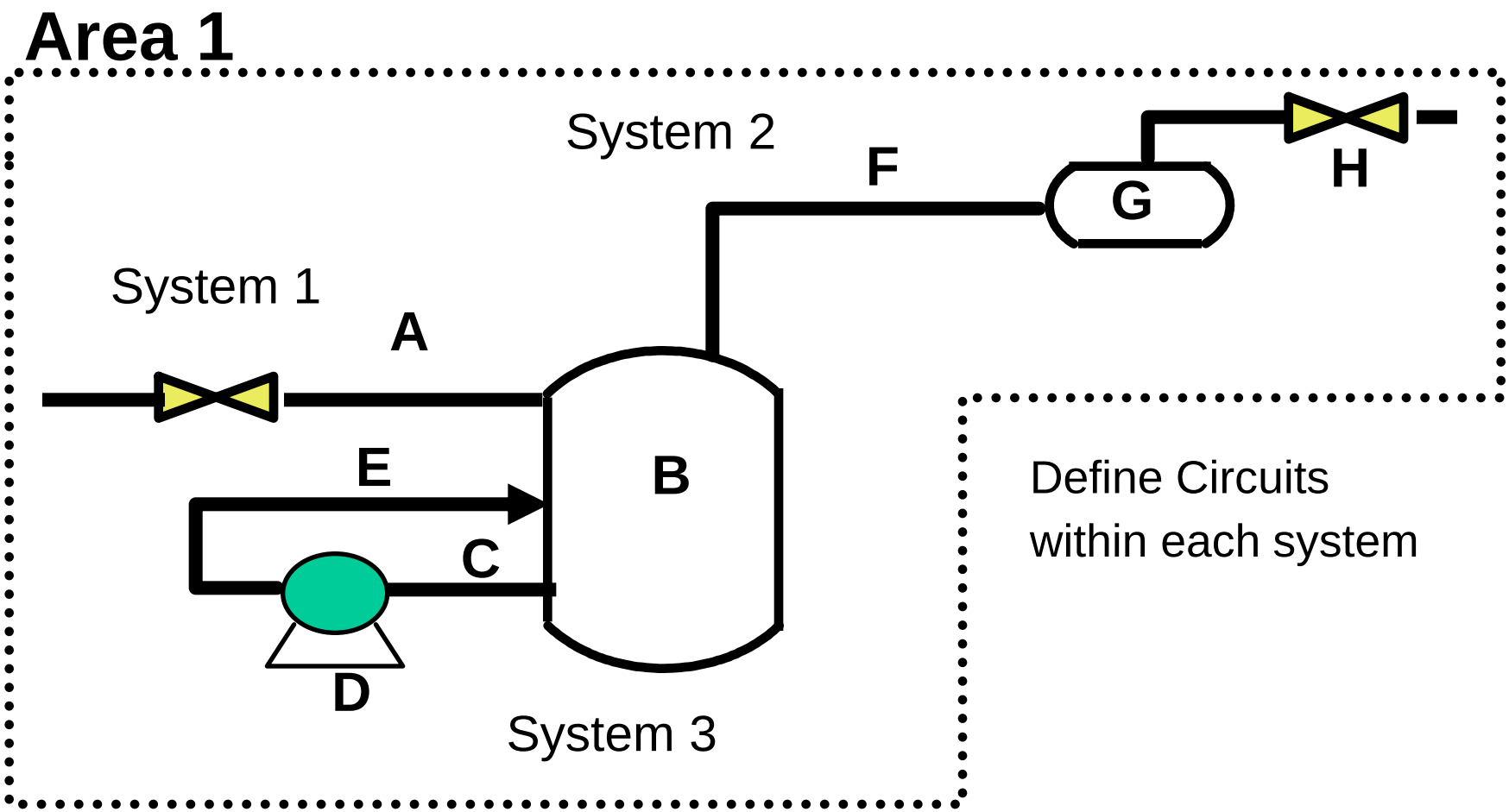

Step 2 - Establish the RBI Team

- Facilitator/Project Manager
- RBI Champion
- Personnel with the following expertise:
  - Inspector
  - Metallurgy/Corrosion Engineer
  - Mechanical/Reliability Engineer
  - Process Engineer
  - Process Hazards
- Team can be and often is a combination of plant and consulting expertise.

RBI Time Frames & Schedules

- An RBI implementation project is easily divided into these main stages
  - First Stage – data gathering and entry
  - Second Stage –interpreting results, performing checks and validation of data and assumptions
  - Third Stage – prioritizing risks and inspection planning development

Step 3 - Create a Complete Equipment List

- List vessels and piping by unit and areas – grouped by corrosion groups of similar service
- Use a spreadsheet (Access of Excel)
- Identify the following:
  - Unit
  - Equipment ID
  - Equipment Description
  - Equipment Type
  - Component ID
  - Component Description
  - Component Type
- Conduct Process overview discussion

➪ This process familiarizes the team with the unit of study

Corrosion Groupings

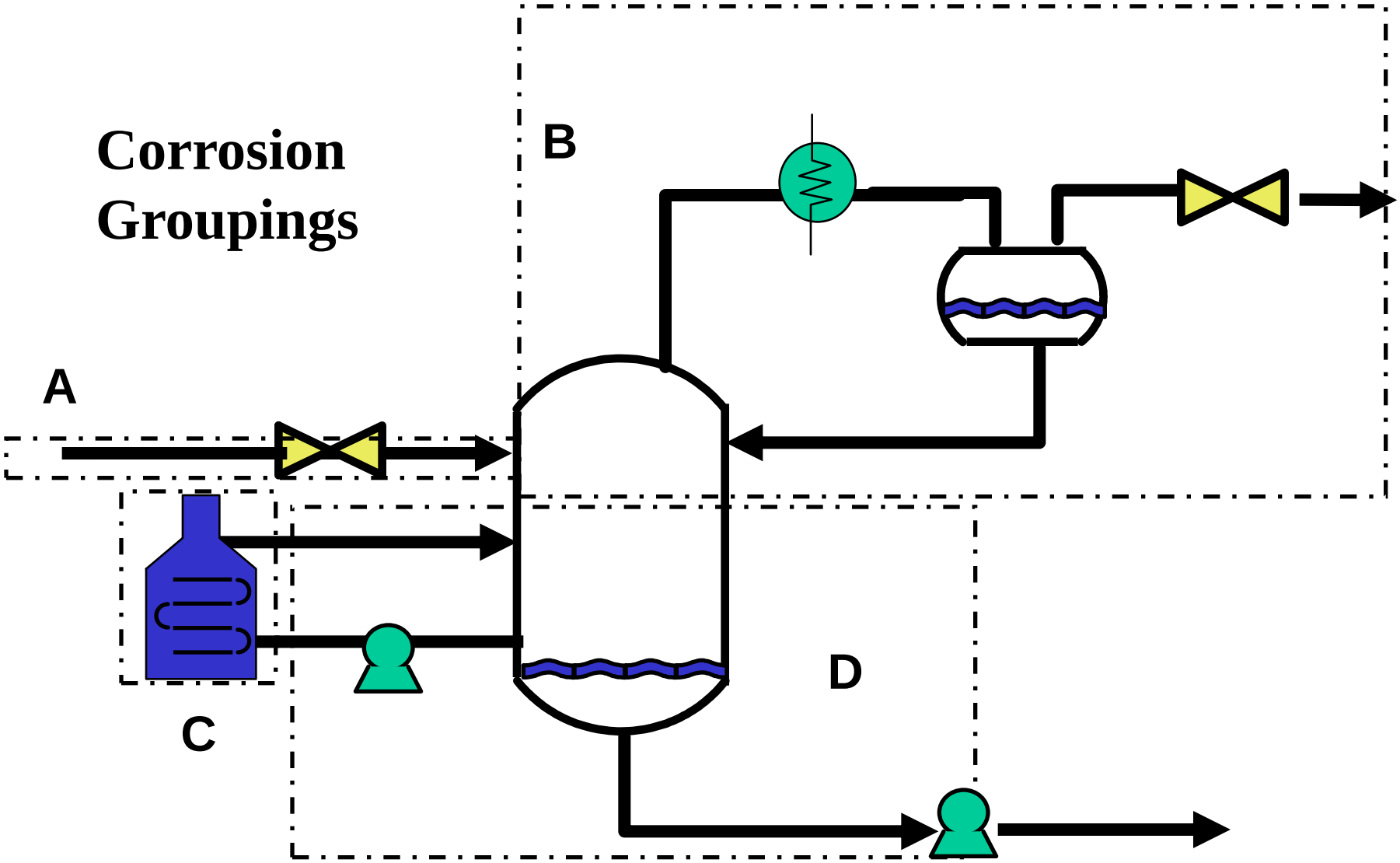

Hints for a Successful Study

- Use a group facilitated approach
- Provide process flow diagrams, populated with key data
- Get people knowledgeable about the unit(s) involved
- Consider maintenance and operational issues as well as inspection history and findings
- Group equipment logically, i.e. corrosion groups
- Use existing electronic information whenever possible
- **And…..Make conservative assumptions and document them**
  - Evaluate preliminary results and risk ranking
  - Identify variables driving risk
  - Update/Improve data, as necessary/appropriate

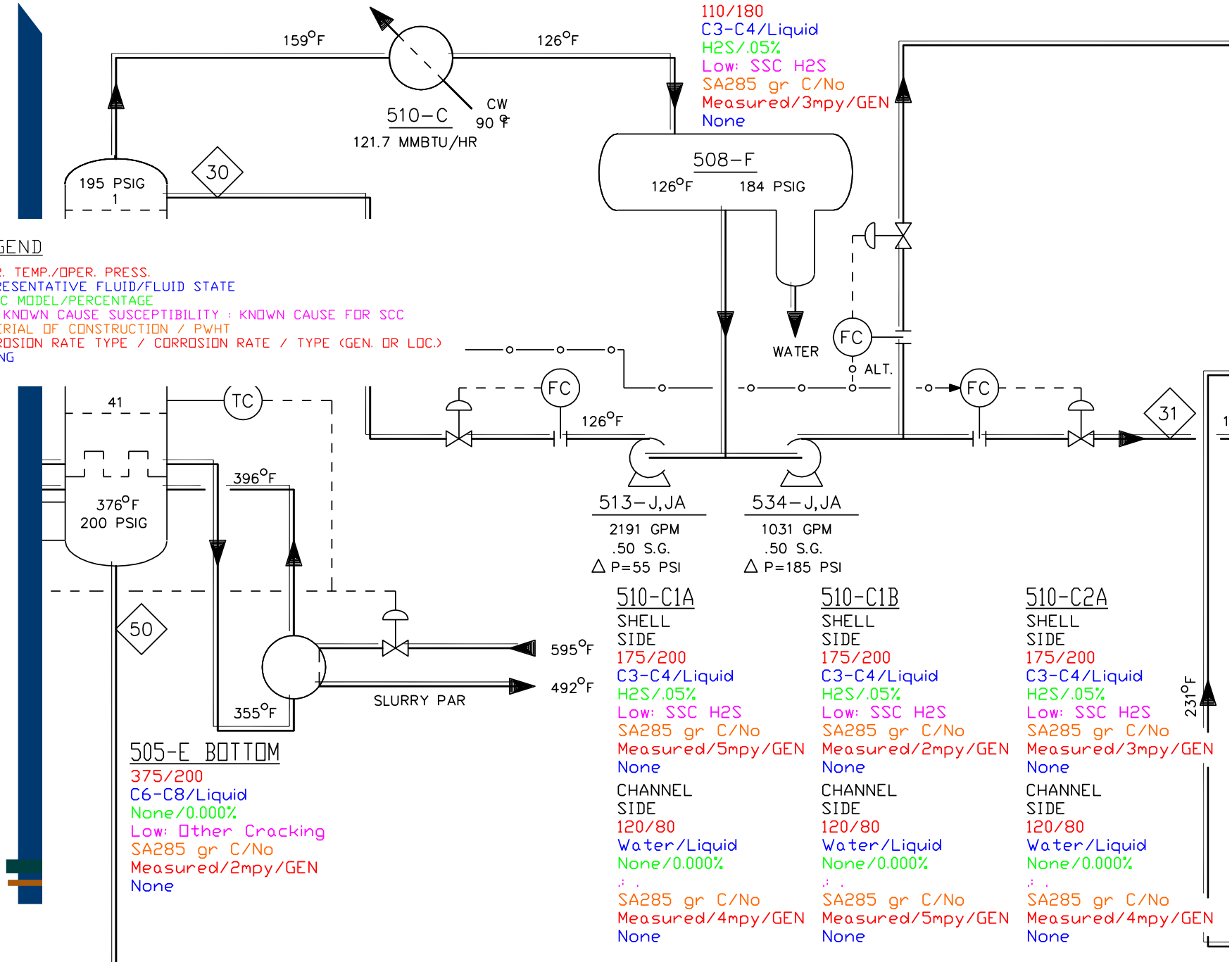
159°F
126°F
510-C
121.7 MMBTU/HR
CW
90 °F
110/180
C3-C4/Liquid
H2S/.05%
Low: SSC H2S
SA285 gr C/No
Measured/3mpy/GEN
None
508-F
126°F
184 PSIG
195 PSIG
1
30
LEGEND
OPER. TEMP./OPER. PRESS.
REPRESENTATIVE FLUID/FLUID STATE
TOXIC MODEL/PERCENTAGE
SCC KNOWN CAUSE SUSCEPTIBILITY : KNOWN CAUSE FOR SCC
MATERIAL OF CONSTRUCTION / PWHT
CORROSION RATE TYPE / CORROSION RATE / TYPE (GEN. OR LOC.)
LINING
WATER
FC
ALT.
FC
FC
126°F
31
41
TC
376°F
200 PSIG
396°F
50
355°F
595°F
492°F
SLURRY PAR
513-J,JA
2191 GPM
.50 S.G.
Δ P=55 PSI
534-J,JA
1031 GPM
.50 S.G.
Δ P=185 PSI
505-E BOTTOM
375/200
C6-C8/Liquid
None/0.000%
Low: Other Cracking
SA285 gr C/No
Measured/2mpy/GEN
None
510-C1A
SHELL SIDE
175/200
C3-C4/Liquid
H2S/.05%
Low: SSC H2S
SA285 gr C/No
Measured/5mpy/GEN
None
CHANNEL SIDE
120/80
Water/Liquid
None/0.000%
SA285 gr C/No
Measured/4mpy/GEN
None
510-C1B
SHELL SIDE
175/200
C3-C4/Liquid
H2S/.05%
Low: SSC H2S
SA285 gr C/No
Measured/2mpy/GEN
None
CHANNEL SIDE
120/80
Water/Liquid
None/0.000%
SA285 gr C/No
Measured/5mpy/GEN
None
510-C2A
SHELL SIDE
175/200
C3-C4/Liquid
H2S/.05%
Low: SSC H2S
SA285 gr C/No
Measured/3mpy/GEN
None
CHANNEL SIDE
120/80
Water/Liquid
None/0.000%
SA285 gr C/No
Measured/4mpy/GEN
None
231°F

Step 4 - Collect General Data

- ✓ Unit
- ✓ Equipment ID
- ✓ Equipment Description
- ✓ Equipment Type
- ✓ Component ID
- ✓ Component Description
- ✓ Component Type
- Base Material of Construction
- Clad/Weld Overlay Material of Construction
- Service Start Date
- Operating Temperature
- Operating Pressure
- Design Temperature
- Design Pressure
- Furnished Thickness
- Corrosion Allowance
- Diameter
- Length
- PWHT
- Insulation Type
- Heat Tracing

Step 5 - Collect Consequence Data

- Process stream characteristics (fluid characteristics representing behavior)
- Fluid phase (inside equipment)
- Toxic component of process stream
- Toxic concentration (typically % of total process stream composition)
- Inventory – calculated by program based on equipment dimensions and fluid density
- Detection, Isolation and Mitigation Systems
- Material Balance is helpful for best modeling for Level 1 or Level 2 modeler

Step 6 - Collect Probability Data

- Material of Construction (Code, Spec, Grade and Year) for Base or Clad materials
- Clad, Weld overlay or Lining, as applicable
- Insulation Type
- Susceptibility Damage Mechanisms
- Expected Damage (damage rate or severity)
- Concentration of contaminants

Probability Data - Thinning

- Identify known in-service damage mechanisms
- Identify if General or Localized behavior of thinning corrosion (localized will affect < 10% of surface area)
- Measure and/or Estimate thinning rates
- Service Start Date or Date for current service
- Furnished Thickness
- Corrosion allowance
- On-line monitoring

Determining Corrosion Rates

- Performed at corrosion groups and circuits level
  - Defined as same active damage mechanism and similar rate/severity
- Determine damage rate based on:
  - Estimated – Corrosion/Materials expert assessment
  - Measured – From inspection history or equipment in similar service
  - Calculated - determine estimates from damage mechanism modules

*Rates for RBI generally range from 0 to 25 mpy

Probability Data - Cracking

- Identify known cracking mechanisms
- Susceptibility to cracking
  - Estimated - Corrosion/Materials expert assessment
  - Detected - Cracking history in this or equipment in similar service
  - Calculated - Determine estimates from damage mechanism modules
- On-line Monitoring

Step 6 - Inspection Data

- Summarize inspection history from records
- Enter date of inspection and inspection results by mechanism (e.g. thickness for thinning)
- Grade effectiveness by damage mechanism
- Start reviewing history with most recent inspection; most reliable and applicable information for current conditions
- Refer to Inspection Effectiveness tables for guidance
- Inspection Effectiveness tables can be customized for each user company

Effectiveness Categories

Effectiveness Category	Category Description
Highly Effective	Inspection methods correctly identify the anticipated in-service damage in nearly every case.
Usually Effective	The inspection methods will correctly identify the true damage state most of the time.
Fairly Effective	The inspection methods will correctly identify the true damage state about half of the time.
Poorly Effective	The inspection methods will provide little information to correctly identify the true damage state.
Ineffective	The inspection methods will provide almost no information that will correctly identify the true damage state.

The inspection effectiveness depends on the active mechanism. It is most effective if the active mechanisms are identified before determining the inspection effectiveness.

Inspection Planning Methodology

- Inspection reduces the expected Probability of failure
- The Probability of failure due to such damage is a function of four factors:
  - Damage mechanism and resulting type of damage
  - Rate of damage progression and escalation of risk
  - Probability of detecting damage and predicting future damage states with inspection techniques
  - Tolerance of the equipment to the type of damage
- Design errors, fabrication flaws, and malfunction of control devices can lead to equipment failure

Inspection Planning Module

Options for Inspection Planning Approach

- Fix when equipment fails or breaks
- Conduct a full inspection on all equipment at fixed intervals (primarily vessels, piping is often neglected)
- Compliance based with the codes / law
- Condition based approach (Probability of failure)
- Risk based approach
  - Qualitative
  - Quantitative

Inspection Planning Module

An Inspection Plan includes consideration for:

- Which equipment needs inspection
- Identification of the mechanism(s) driving the inspection
- Interval for inspection
- Locations and coverage required
- Methods/Techniques to be used for inspection
- In addition an inspection plan should include:
  - The acceptable limits for the inspection findings
  - Follow up with fitness for service analysis, if necessary

Inspection Planning Module

Objectives of an Inspection Program

- Prioritization of equipment and piping for inspection
- To minimize downtime during turnarounds
- Identify on-stream inspection candidates
- To achieve more effective use of resources
- Special Emphasis inspection programs
- Assess the impact of turnarounds deferrals

Inspection Planning

- Risk will increase until the date of inspection. The calculated risk will decrease after RBI inspection plan is implemented.

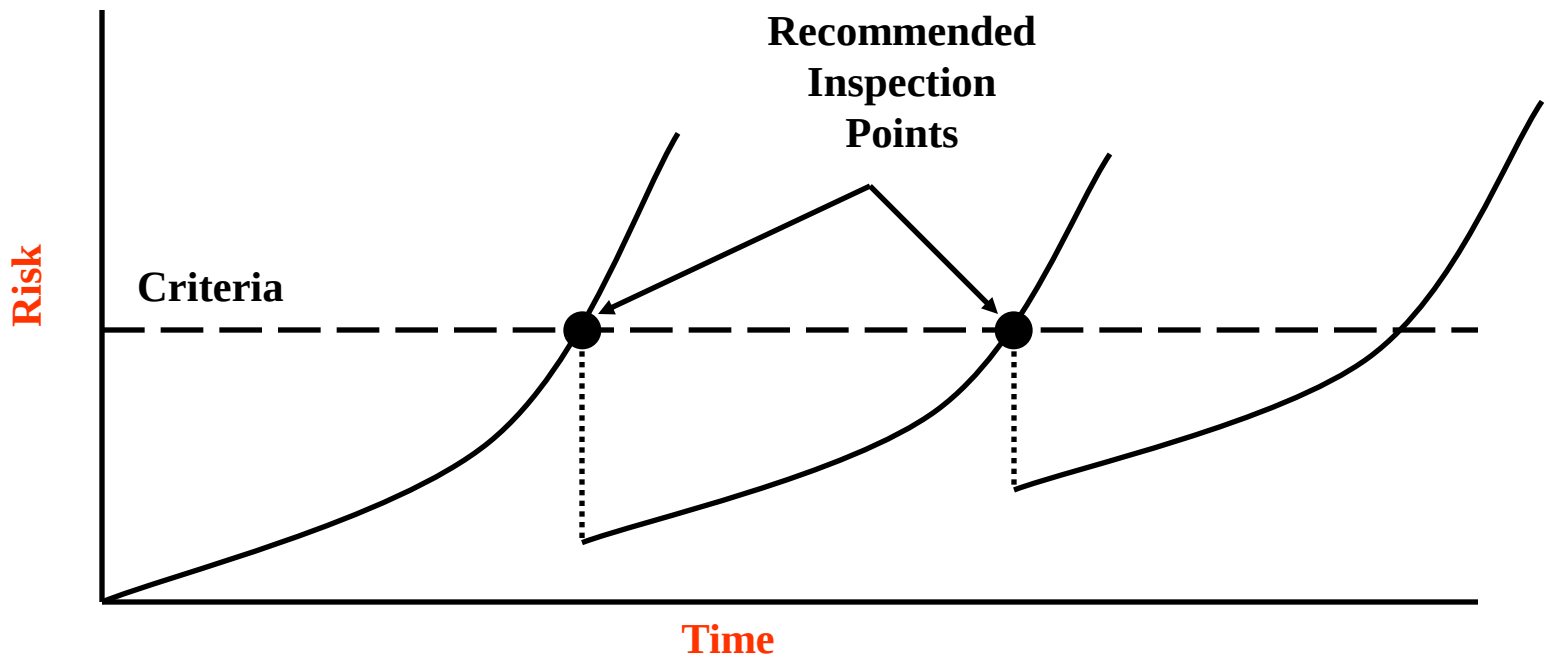

Inspection Planning

- Two methods for Inspection Planning
  - Date – Returns a recommended date for inspection based on maximum Area or Financial Risk input and planned inspection (number and effectiveness) for each damage type
  - Plan – Returns a recommended effectiveness for inspection based on maximum Area or Financial Risk input and date for inspection

Inspection Planning - Plan

- Input required is date of inspection during planning period
- Enter Plan Time in Maximum Inspection Interval field
- Local Target Risk Inputs can be used to override Global Settings

➢ Calculates Inspection necessary for the component to remain below the Maximum Risk Target
  - Will generate the next (1) inspection and an effectiveness of A, B or C

EEG: APIRBI 8.03 | User: root | DB Type: MYSQL | DB Name: eeg_worked_eg_v2

- localhost
  - Training
    - Plant
      - Sat Gas
      - Sat Gas_e
        - V07
          - V07
          - V07-439
      - Sat Gas_m

Inspection Planning

Inspection Plan Option: PLAN

Component: V07 — V07 DEBUT OH ACCUM VESSEL

General

Input Inspection Plan parameters

Inspection Plan Date (yyyy-mm-dd)	2018-05-01
Inspection Plan Basis	AREA
Area Risk Target (ft²/yr)	40
Financial Risk Target ($/year)	1000
Max Inspection Interval (yrs)	25
DF Target	3000

Calculated Inspection Plan

Plan Method: RISK

	Category	Number	Inspection Date
Thinning	A	1	2008-09-07
Cracking	C	1	2008-09-07
External Damage	E	0	2008-09-07
HTHA	E	0	2008-09-07

Calculated Risk Results

	RBI Date		Target Date Without Inspection		Plan Date Without Inspection		Plan Date With Inspection	
Date (yyyy-mm-dd)	2008-05-01		2008-09-07		2018-05-01		2018-05-01	
Years from RBI Date	0.0		0.354		9.999		9.999	
Thinning Risk/DF	9.058	17.987	13.487	26.781	99.485	197.549	8.413	16.706
Cracking Risk/DF	26.232	52.089	26.513	52.648	34.274	68.058	6.094	12.102
External Damage Risk/DF	0.0	0.0	0.0	0.0	0.0	0.0	0.0	0.0
Brittle Fracture Risk/DF	0.0	0.0	0.0	0.0	0.0	0.0	0.0	0.0
Mechanical Fatigue Risk/DF	0.0	0.0	0.0	0.0	0.0	0.0	0.0	0.0
HTHA Risk/DF	0.0	0.0	0.0	0.0	0.0	0.0	0.0	0.0
Total Risk/DF	35.29	70.076	40.0	79.429	133.758	265.607	14.507	28.808
Total Risk Gradient	13.296		13.296		7.873		1.54	
Risk Matrix	3E		3E		4E		3E	
Risk Category	HIGH		HIGH		HIGH		HIGH	
Mod. Inspection Plan Date	2018-05-01							

Save | Help | Delete | View Plots | Recommendations | Calculate | Inspection Report

Inspection Planning - Plan

Inspection Planning - Date

- Input required is number of inspections planned and effectiveness during planning period
- Enter Plan Date
- Local Target Risk Inputs can be used to override Global Settings

➢ Calculates Date component reaches Maximum Risk Target with and without inspection

EEG: APIRBI 8.03 | User: root | DB Type: MYSQL | DB Name: eeg_worked_eg_v2

- localhost
  - Training
    - Plant
      - Sat Gas
      - Sat Gas_e
        - V07
          - V07
          - V07-439
      - Sat Gas_m

Inspection Planning

Inspection Plan Option: DATE

Component: V07 — V07 DEBUT OH ACCUM VESSEL

General

Input Inspection Plan parameters

Inspection Plan Basis	AREA
Area Risk Target (ft²/yr)	40
Financial Risk Target ($/year)	1000
Max Inspection Interval (yrs)	25
DF Target	3000

Calculated Inspection Plan

Plan Method: RISK

	Category	Number	Inspection Date
Thinning	A	1	2008-09-07
Cracking	C	1	2008-09-07
External Damage	E	1	
HTHA	E	1	

Calculated Risk Results

	RBI Date		Target Date Without Inspection		Target Date With Inspection	
Date (yyyy-mm-dd)	2008-05-01		2008-09-07		2023-08-06	
Years from RBI Date	0.0		0.354		15.264	
Thinning Risk/DF	9.058	17.987	13.487	26.781	30.159	59.888
Cracking Risk/DF	26.232	52.089	26.513	52.648	9.841	19.541
External Damage Risk/DF	0.0	0.0	0.0	0.0	0.0	0.0
Brittle Fracture Risk/DF	0.0	0.0	0.0	0.0	0.0	0.0
Mechanical Fatigue Risk/DF	0.0	0.0	0.0	0.0	0.0	0.0
HTHA Risk/DF	0.0	0.0	0.0	0.0	0.0	0.0
Total Risk/DF	35.29	70.076	40.0	79.429	40.0	79.429
Total Risk Gradient	13.296		13.296		5.657	
Risk Matrix	3E		3E		3E	
Risk Category	HIGH		HIGH		HIGH	
Plan Date (yyyy-mm-dd)	2018-05-01					

Save | Help | Delete | View Plots | Recommendations | Calculate | Inspection Report

Inspection Planning - Date

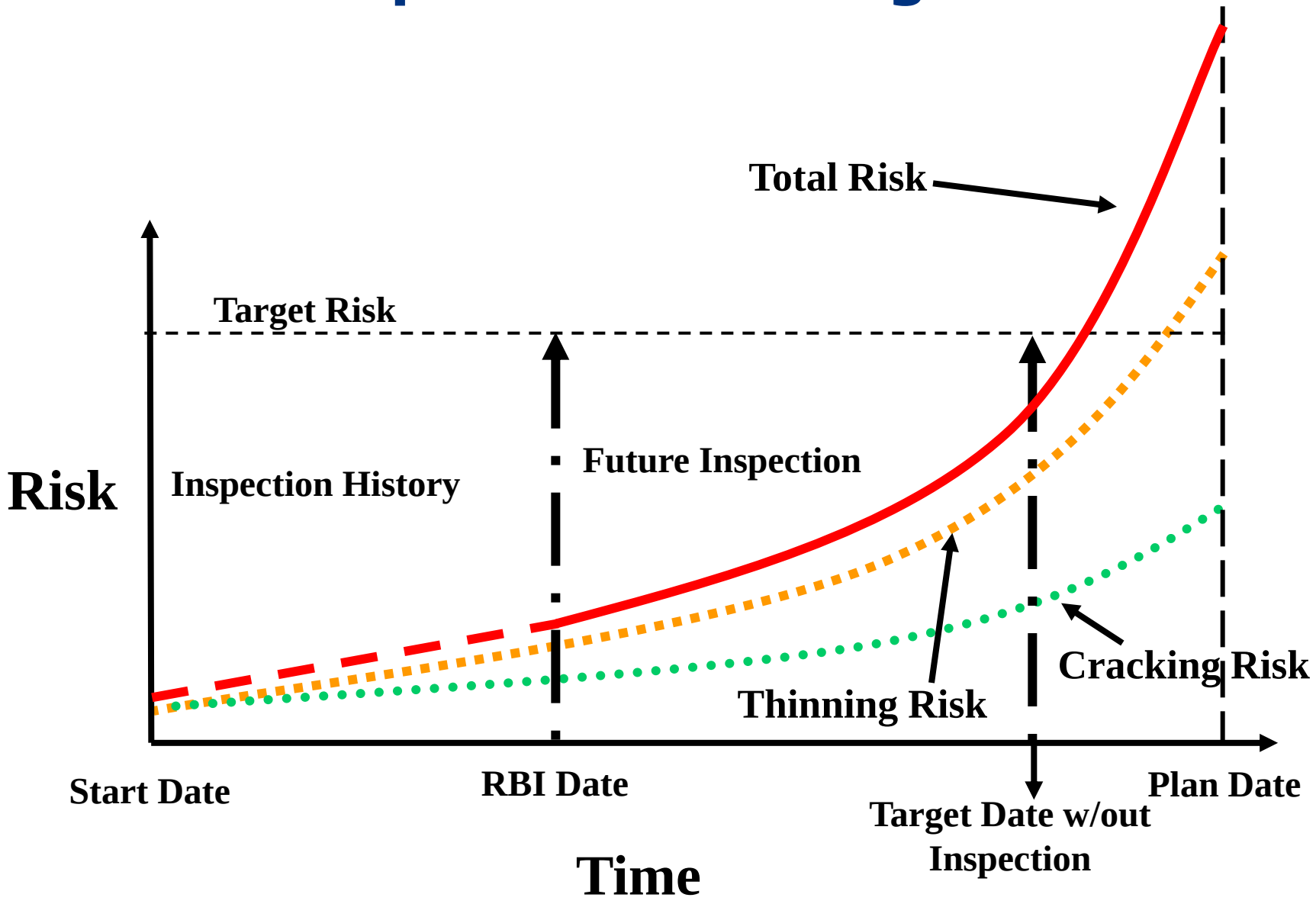

EEG: APIRBI 8.03 | User: root | DB Type: MYSQL | DB Name: eeg_worked_eg_v2

- localhost
  - Training
    - Plant
      - Sat Gas
      - Sat Gas_e
        - V07
          - V07
          - V07-439
      - Sat Gas_m

Inspection Planning

Inspection Plan Option: PLAN

Component: V07 — V07 DEBUT OH ACCUM VESSEL

General

Input Inspection Plan parameters

Inspection Plan Date (yyyy-mm-dd)	2018-05-01
Inspection Plan Basis	AREA
Area Risk Target (ft²/yr)	40
Financial Risk Target ($/year)	1000
Max Inspection Interval (yrs)	25
DF Target	3000

Calculated Inspection Plan

Plan Method: RISK

	Category	Number	Inspection Date
Thinning	A	1	2008-09-07
Cracking	C	1	2008-09-07
External Damage	E	0	2008-09-07
HTHA	E	0	2008-09-07

Calculated Risk Results

	RBI Date		Target Date Without Inspection		Plan Date Without Inspection		Plan Date With Inspection	
Date (yyyy-mm-dd)	2008-05-01		2008-09-07		2018-05-01		2018-05-01	
Years from RBI Date	0.0		0.354		9.999		9.999	
Thinning Risk/DF	9.058	17.987	13.487	26.781	99.485	197.549	8.413	16.706
Cracking Risk/DF	26.232	52.089	26.513	52.648	34.274	68.058	6.094	12.102
External Damage Risk/DF	0.0	0.0	0.0	0.0	0.0	0.0	0.0	0.0
Brittle Fracture Risk/DF	0.0	0.0	0.0	0.0	0.0	0.0	0.0	0.0
Mechanical Fatigue Risk/DF	0.0	0.0	0.0	0.0	0.0	0.0	0.0	0.0
HTHA Risk/DF	0.0	0.0	0.0	0.0	0.0	0.0	0.0	0.0
Total Risk/DF	35.29	70.076	40.0	79.429	133.758	265.607	14.507	28.808
Total Risk Gradient	13.296		13.296		7.873		1.54	
Risk Matrix	3E		3E		4E		3E	
Risk Category	HIGH		HIGH		HIGH		HIGH	
Mod. Inspection Plan Date	2018-05-01							

Save | Help | Delete | View Plots | Recommendations | Calculate | Inspection Report

View Plots

Available Plots

- Risk
- Risk Pie
- Risk Bar
- Risk No Inspection
- Risk Pie No Inspection
- Risk Bar No Inspection
- DF
- DF No Inspection

Ok

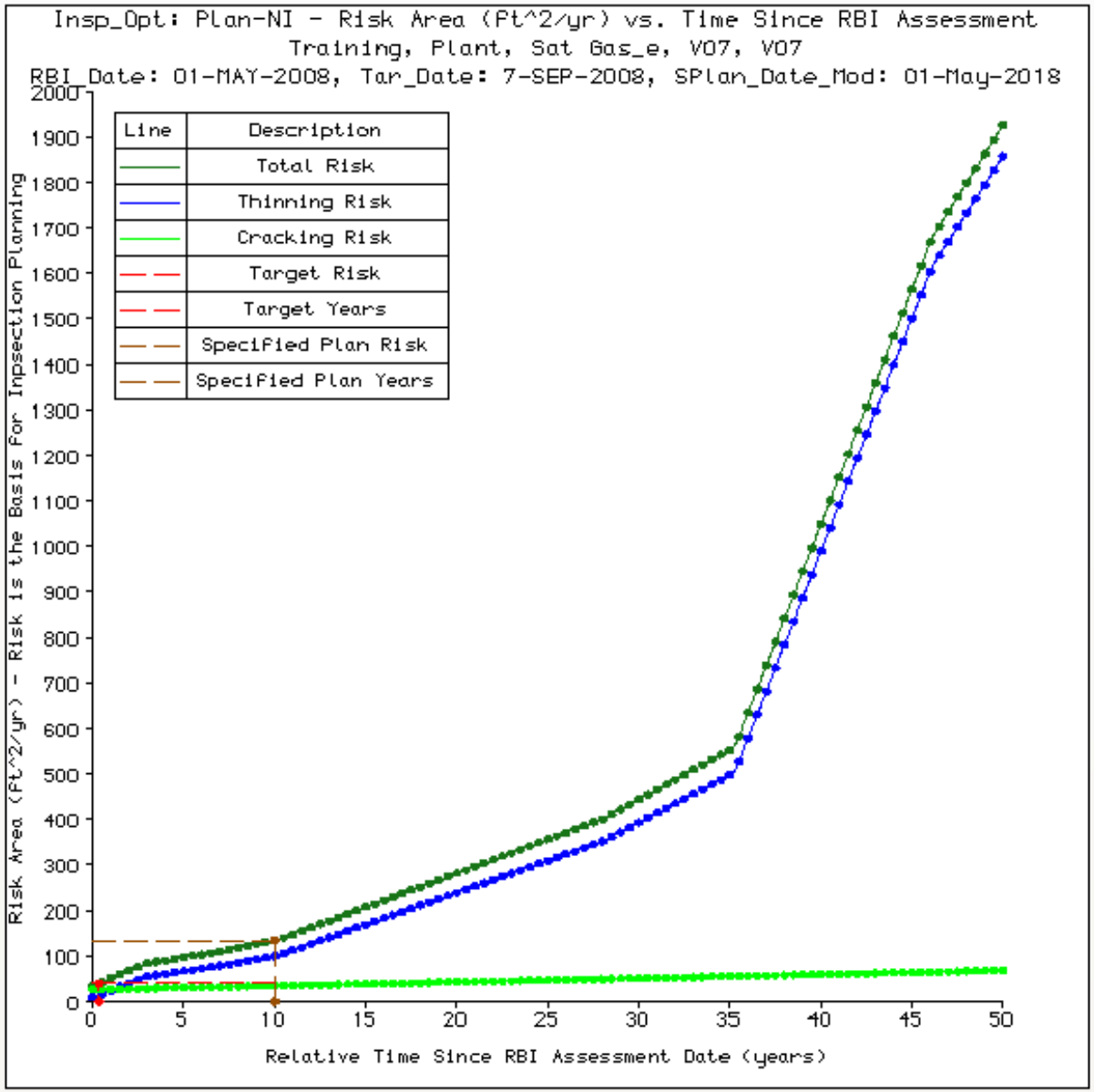

View Plots

Available Plots

- Risk
- Risk Pie
- Risk Bar
- Risk No Inspection
- Risk Pie No Inspection
- Risk Bar No Inspection
- DF
- DF No Inspection

Ok

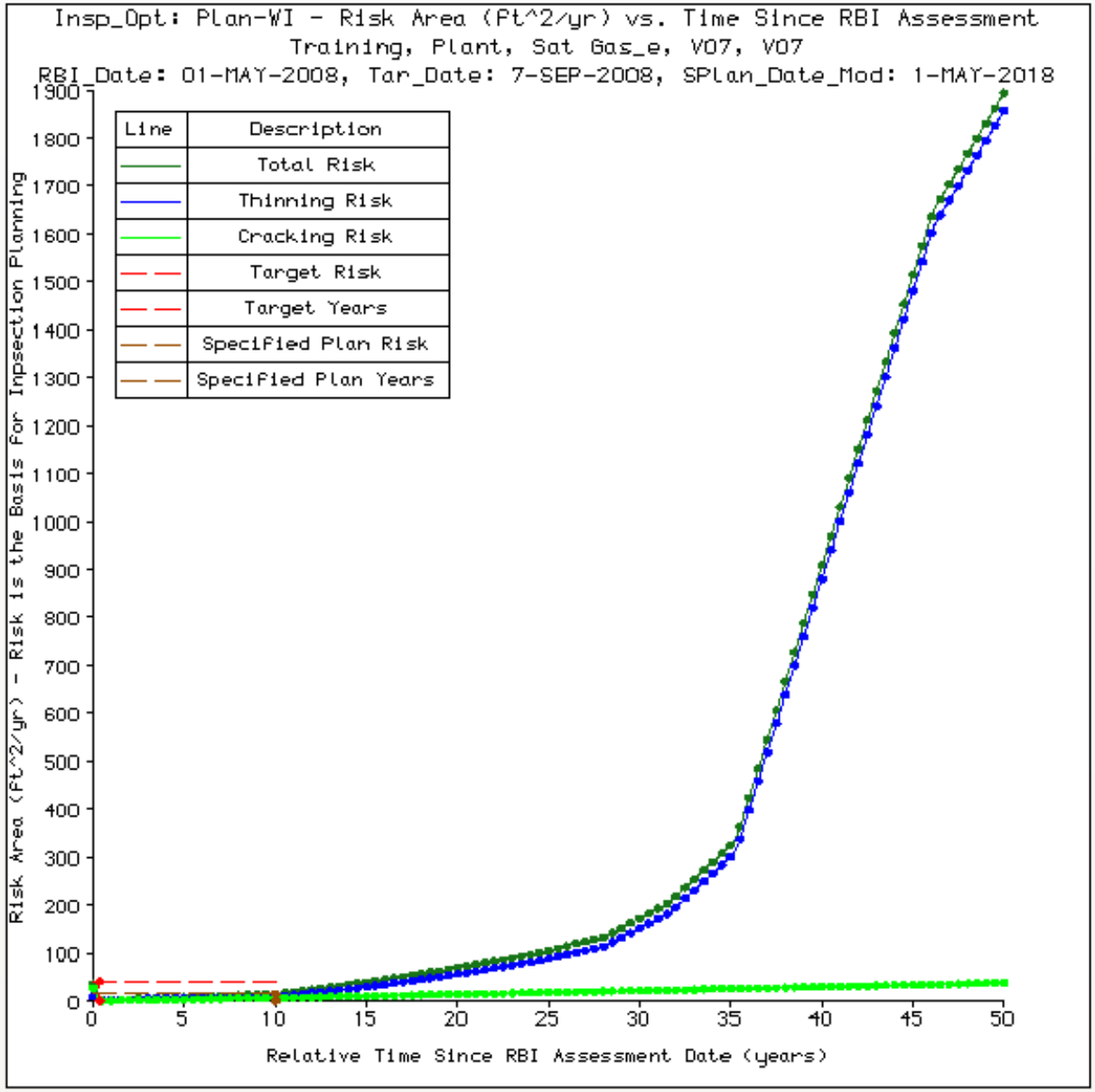

RBI Reassessment & Updating

Reassessment and Updating RBI

- API 580 highlights reasons for why and when an assessment will be re-evaluated
- Reasons to Conduct an RBI Reassessment:
  - Deterioration Mechanisms and Inspection Activities
  - Process & Hardware changes
  - RBI Assessment Premise Change
  - Effect of Mitigation Strategies
- When to Conduct an RBI Reassessment
  - After significant changes
  - After a set Time Period
  - After Implementation of Risk Mitigation Strategies
  - Before and After Maintenance Turnarounds

Reassessment and Updating RBI

- Additional Reasons for Re-evaluation
  - Changes in RBI technology or improvements that affect the risk calculation
  - Changes in code that affect the recommendations
  - Changes in law or regulatory policies
  - Change in company risk policy
  - Process changes, includes debottlenecking, changes in feed, changes in catalyst, changes in alloying, etc.
  - Considerations as learned from a failure in that plant or another plant with a similar process
  - Extension of run length between turnarounds

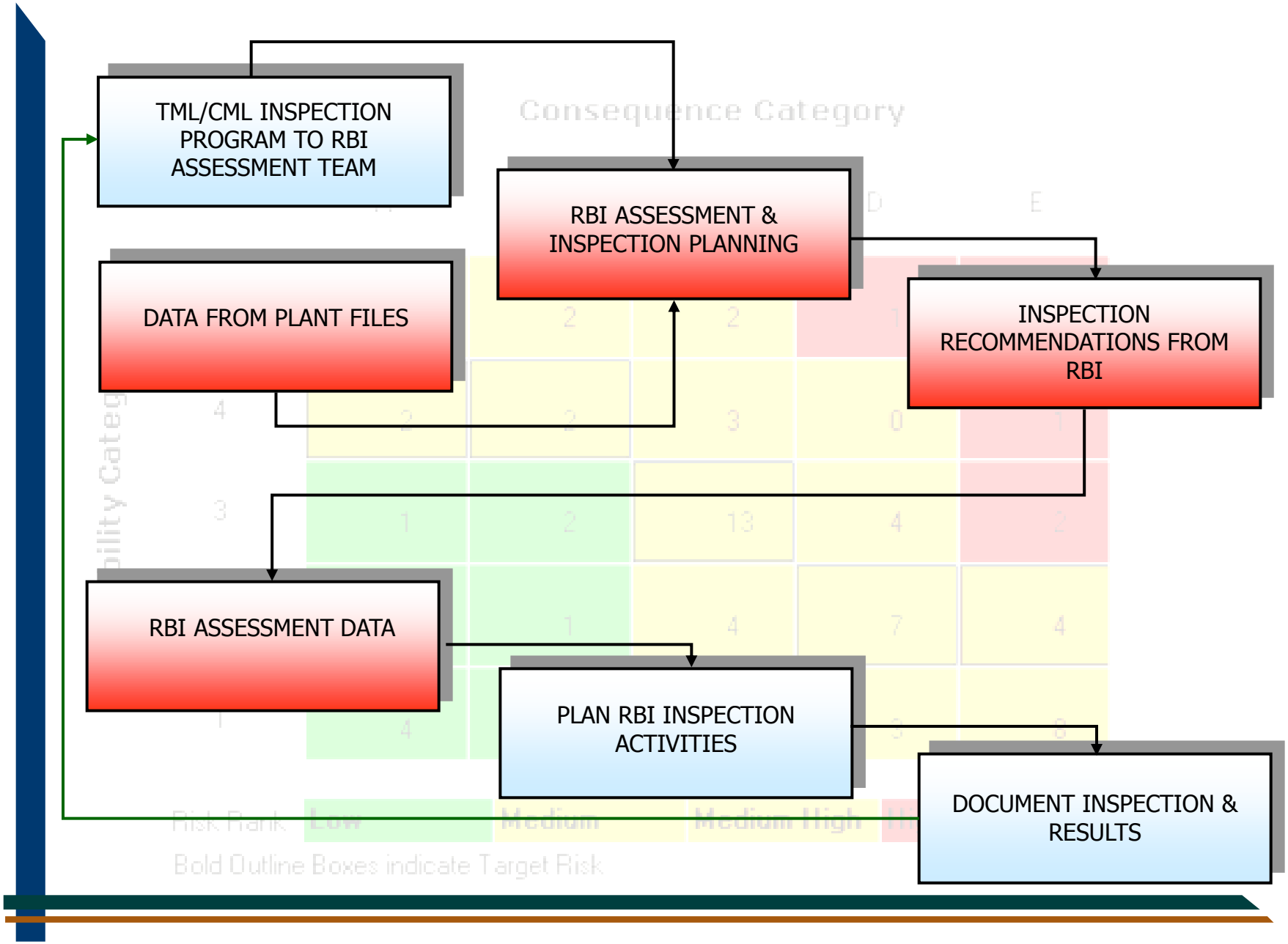
TML/CML INSPECTION PROGRAM TO RBI ASSESSMENT TEAM
RBI ASSESSMENT & INSPECTION PLANNING
DATA FROM PLANT FILES
INSPECTION RECOMMENDATIONS FROM RBI
RBI ASSESSMENT DATA
PLAN RBI INSPECTION ACTIVITIES
DOCUMENT INSPECTION & RESULTS

Risk Matrix Report

Current Risk | Future Risk With No Inspection | Future Risk With Inspection

Current Risk

Unit: Sat Gas

Consequence Category

Probability Category	A	B	C	D	E	
5	0	0	0	0	4	4
4	0	0	1	0	1	2
3	0	0	0	0	1	1
2	0	0	0	0	1	1
1	0	0	0	1	0	1
	0	0	1	1	7	

Risk Rank Totals	9	
High	6	66.67
MediumHigh	2	22.22
Medium	1	11.11
Low	0	0.0

Fri Dec 05 12:07:23 CST 2008

OK | Export | Print

Components with Risk Matrix 5E

T01|T01-Btm
T03|T03-Top
T04|T04-Top
V08|V08

Ok

API RBI Analysis

Thinning / Equipment Linings

What-If: No | Component: V07 | V07 DEBUT OH ACCUM VESSEL

Thinning | Thinning Supplement | Equipment Lining

Input Data

Online Monitoring	N-None
Injection Point	No
Injection Point Inspection	No
Deadleg	No
Deadleg Inspection	No
Thinning Type	General
BM Gov Thinning Mech	Thinning supplement not specified
CM Gov Thinning Mech	Thinning supplement not specified
Thinning Damage Mechanism	
Other Thinning Damage	

Damage Drivers

BM Spec	SA285
BM Grade	C
Design Temperature (°F)	450.0
Design Pressure (psig)	165.053
Component Start Date (yyyy-mm-dd)	1972-01-01
Furnished Thickness (in)	0.812
Inspection Date (yyyy-mm-dd)	2003-04-04
Measured Thickness (in)	0.75
Operating Temperature (°F)	120.999
Operating Pressure (psig)	100.946

Base Material

Corrosion Rate	Measured
Estimated Rate (mpy)	17.008
Measured Rate (mpy)	11.417
Gov Thinning Corrosion Rate (mpy)	0.0

Clad Material

Corrosion Rate	Estimated
Estimated Rate (mpy)	0.0
Measured Rate (mpy)	0.0
Gov Thinning Corrosion Rate (mpy)	0.0

Calculated Results

Highest Effective Insp	B	Total DF	70.07560936572	Risk Category	HIGH
No Highest Effective Insp	1.0000	POF	2.14431E-03	Maximum Risk	35.28969652835
Age (yrs)	5.07597535934292	COF (ft²)	1.64573E+04	Financial Risk ($/yr)	2.99732E+04
DF	17.9869901001296	Risk Matrix	3E		
Likelihood Category	2				

Save | Help | Delete | Calculate | Comments

Measured corrosion rates and measured thickness by circuit.

API RBI Inspection Planning

Inspection Planning

Inspection Plan Option: PLAN | Component: V07 | V07 DEBUT OH ACCUM VESSEL

General

Input Inspection Plan parameters

Inspection Plan Date (yyyy-mm-dd)	2018-05-01
Inspection Plan Basis	AREA
Area Risk Target (ft²/yr)	40
Financial Risk Target ($/year)	1000
Max Inspection Interval (yrs)	25
DF Target	3000

Calculated Inspection Plan

Plan Method: RISK

	Category	Number	Inspection Date
Thinning	A	1	2008-09-07
Cracking	C	1	2008-09-07
External Damage	E	0	2008-09-07
HTHA	E	0	2008-09-07

Calculated Risk Results

	RBI Date		Target Date Without Inspection		Plan Date Without Inspection		Plan Date With Inspection	
Date (yyyy-mm-dd)	2008-05-01		2008-09-07		2018-05-01		2018-05-01	
Years from RBI Date	0.0		0.354		9.999		9.999	
Thinning Risk/DF	9.058	17.987	13.487	26.781	99.485	197.549	8.413	16.706
Cracking Risk/DF	26.232	52.089	26.513	52.648	34.274	68.058	6.094	12.102
External Damage Risk/DF	0.0	0.0	0.0	0.0	0.0	0.0	0.0	0.0
Brittle Fracture Risk/DF	0.0	0.0	0.0	0.0	0.0	0.0	0.0	0.0
Mechanical Fatigue Risk/DF	0.0	0.0	0.0	0.0	0.0	0.0	0.0	0.0
HTHA Risk/DF	0.0	0.0	0.0	0.0	0.0	0.0	0.0	0.0
Total Risk/DF	35.29	70.076	40.0	79.429	133.758	265.607	14.507	28.808
Total Risk Gradient	13.296		13.296		7.873		1.54	
Risk Matrix	3E		3E		4E		3E	
Risk Category	HIGH		HIGH		HIGH		HIGH	
Mod. Inspection Plan Date	2018-05-01							

Save | Help | Delete | View Plots | Recommendations | Calculate | Inspection Report

Inspection recommendations and due date.

Detailed inspection plans include scope, damage mechanism and recommended inspection effectiveness.

Inspection Results

- Inspection results and findings should be compared to expectations of damage
  - Thinning rate and type (general or localized)
  - Cracking inspection findings – if cracking was found and severity, if found
- Where there any inspection findings that could impact the RBI Assessment?
- Are there any MOC considerations that could impact the Risk Assessment?
- Any new information or findings should be noted and returned to the RBI analysis Team

Inspection Results into API RBI

Inspection History

Flow Order No 33 | Component V07 | V07 DEBUT OH ACCUM VESSEL

System Specifier Debut Ovhd, H2S, water

History Form | History Table | Material | Damage Mechanisms

#	Inspection Date	THINNING Inspection Category	THINNING Measured Thickness	EXTERNAL DAMAGE CS&LA Inspection Category
1	2009-05-15	B	0.74	
2	2004-11-03			C
3	2003-04-04			
4	2001-11-13			

Row 1

Inspection Date 2009-05-15

Thinning

Inspection Category B

Measured Thickness 0.74

Cracking

Amine Inspection Category

Carbonate Inspection Category

Caustic Inspection Category

Chloride Inspection Category

HIC SOHIC H2S Inspection Category C

HIC SOHIC HF Inspection Category

HSC HF Inspection Category

PTA Inspection Category

SSC H2S Inspection Category

Other Inspection Category

External Damage

CS&LA Inspection Category

CSA&LA Measured Thickness

CS&LA CUI Inspection Category D

CS&LA CUI Measured Thickness

SS External SCC Inspection Category

SS CUI Inspection Category

HTHA

Inspection Category

Embrittlement

Sigma Phase

Comment

Save | Help | Ok | Cancel

Record actual inspection effectiveness and measured thickness to be used in Risk determination

Updated measured corrosion rate also entered in Thinning Module and Risk recalculated for next interval recommendation.

Reassessment & Updating

- Re-evaluation of Risk for equipment with inspection findings were noted
- Consider severity and type of damage compared to expectations
- Determine if the risk assessment needs to be modified based on findings
- Determine if MOC or process/debottlenecking requires re-evaluation or further consideration
- Recalculate Risk and begin inspection planning activity
- Prompt User for new RBI Date (after latest inspection date), Plan Date and notification of last RBI analysis Date

Other Considerations

- Damage mechanism screening using API 571
- MOE link to identify key variables and ranges driving damage – notification system for exceeding or operating outside of the set ranges

Summary

- API RBI was originally developed in a Joint Industry Project (JIP) sponsored by API, the JIP currently consists of 47 companies with worldwide processing plant facilities
- Data input requirements minimal compared with output value
- API RP 581 2nd Edition, September 2008
- API RP 580 2nd edition in Ballot process
- Refer to API 580 when determining the need for reassessment & updating for continuous improvement of RBI program for managing risk

The Equity Engineering Group, Inc.

Lynne Kaley, P.E.
Phone: 281-283-6502 • email: lckaley@equityeng.com

2625 Bay Area Blvd.• Suite 325
Houston, TX 77058 USA
Phone: 281-480-0556 • Fax: 281-480-2063
www.equityeng.com